УДК 621.9.06

D.A. DMITRIEV, V.V. RACHINSKIY, S.N. PIVEN
Kherson National Technical University

APPLICATION OF FRAME CONFIGURATION FOR COMPLEX WORKPIECE PROCESSING BY SURFACE PLASTIC DEFORMATION

The article examines the existing approaches of burnishing surface processing by surface plastic deformation. The application of the machine-tools with mechanisms of parallel structure for this technology is shown. The method and the results of the evaluation of the stress-strain state of frame structure machine-tolls and the frame structure technological equipment, based on spatial hinged-rod mechanisms of parallel structure are presented. The technical and technological efficiency of different frame layouts in the term of the power load and the preconditions of its application at the burnishing operations of processing of complex profile details and surfaces by methods of surface plastic deformation are reviewed.

Keywords: burnishing surface processing, methods of surface plastic deformation, the mechanisms of parallel structure, frame layouts, power load.

Д.О. ДМИТРІЄВ, В.В. РАЧИНСЬКИЙ, С.М. ПІВЕНЬ
Херсонський національний технічний університет

ЗАСТОСУВАННЯ ВЕРСТАТІВ КАРКАСНИХ КОМПОНОВОК ДЛЯ ОБРОБКИ СКЛАДНИХ ДЕТАЛЕЙ ПОВЕРХНЕВИМ ПЛАСТИЧНИМ ДЕФОРМУВАННЯМ

В статті розглянуто існуючі підходи щодо технологічного забезпечення фінішної обробки поверхневим пластичним деформуванням. На основі чого обґрунтовано передумови застосування верстатів каркасних компоновок для даної технології. Наведено розроблений метод і результати оцінки напружено-деформованого стану верстатного та технологічного обладнання каркасних компоновок на основі просторових шарнірно-стрижневих механізмів паралельної структури. Розглянуто технічну і технологічну здатність каркасних компоновок в умовах силового навантаження до застосування на фінішних операціях обробки складнопрофільних деталей і поверхонь методами поверхневого пластичного деформування.

Ключові слова: каркасні компоновки, силове навантаження, механізми паралельної структури, методи поверхневого пластичного деформування.

Д.А. ДМИТРИЕВ, В.В. РАЧИНСКИЙ, С.Н. ПИВЕНЬ
Херсонский национальный технический университет

ПРИМЕНЕНИЕ СТАНКОВ КАРКАСНЫХ КОМПОНОВОК ДЛЯ ОБРАБОТКИ СЛОЖНЫХ ДЕТАЛЕЙ ПОВЕРХНОСТНЫМ ПЛАСТИЧЕСКИМ ДЕФОРМИРОВАНИЕМ

В статье рассмотрены существующие подходы относительно технологического обеспечения финишной обработки поверхностным пластическим деформированием, на основе чего обоснованы предпосылки применения станков каркасных компоновок для данной технологии. Приведены разработанный метод и результаты оценки напряженно-деформированного состояния станочного и технологического оборудования каркасных компоновок на основе пространственных шарнирно-стержневых механизмов параллельной структуры. Рассмотрены техническая и технологическая способность каркасных компоновок в условиях силовой нагрузки к применению на финишных операциях обработки сложнопрофильных деталей и поверхностей методами поверхностного пластического деформирования.

Ключевые слова: каркасные компоновки, силовая нагрузка, механизмы параллельной структуры, методы поверхностного пластического деформирования.

Statement of the problem

The purpose of the work is to justify the use of machine-tools with MPS in the SPD technologies. The base of the research is the preliminary determination of the processing characteristic loads due to the need of rod-hinged mechanisms special space orientation in the locations within the highest stiffness value of the parallel structure. Existing ways to predict the microrelief height in the contact place of the hard roller with the workpiece are based on theoretical calculations according to provisions of the theories of elasticity and plasticity. In this case, this definition in static conditions of deformation does not correspond to a complex of factors that influence the dynamic contact of the tool and the workpiece (Fig. 2).

Analysis of previous researches and publications

Surface plastic deformation (SPD) is widely used to enhance fatigue resistance and to increase metal surface layer hardness, as well as to form internal stress of this layer (mainly compressive stress) and the formation of the regulated surface asperities [2, 5]. The radial beating of the workpiece and the hard roller geometric dimensions deviation causes elastic displacement of the tool and the load variation developed by the elastic tool. The radial beating value, according to our calculations, is within 5% - 10% for the P_{load} force in the range of 1.5 to 3.0 kN. If necessary, this factor can be taken into account with the help of the fluctuation of the contact pressure in the processing zone $p_{\min}^{\max}$, calculated in accordance with the profile and the actual contact area between the hard roller and the workpiece. The settlement issues with regard to SPD were considered rather broadly [1, 2, 4, 9].

According to modern notions, the value of the plastic intrusion of h_{pl} can be obtained from the equation of the actual contact area A_r between the tool and the workpiece. Because the magnitude of the plastic deformation of the initial roughness is determined by the formation of the actual contact area of the tool with the treated surface, which is capable of perceiving the workload of either a hard roller or a hard ball when it is swinging or sliding. Taking into account the initial roughness of the external rotation surfaces $\mathbf{A_r}$ is determined by the following dependence [9]:

$$A_r = \frac{\Delta p}{HB} = A_a \frac{t_{m\ out}}{100}\left(\frac{h_{pl}}{R_{p\ out}}\right)^{\nu_{out}},$$

where Aa - nominal contact area of the roller with the workpiece; $t_{m\ out}$ - value of the relative length of the output roughness reference line at the average level; Δp - pressure on the contact area, Pa; HB - hardness of deformed material in the Brinell numbers; $R_{p\ out}$ - height of smoothing out the original roughness; ν_{out} - parameter characterizing the reference surface of the profile of the exit roughness of the workpiece, provided its load-bearing capacity.

As usual in scientific research, in order to estimate the roughness carrying capacity using of such index as the curve of the reference surface is commonly widespread. This index is constructed in relative coordinates $t_p=b\varepsilon^{\nu}$ with parameters of its initial plot ν and b (where t_p - relative reference profile length at level p). Experimental studies [9] have shown that the support curve is satisfactorily described by the equation $t_p = 100b\,(y/100)^{\nu}$ to the level of the middle line. Integrated this equation by y from 0 to R_p, a dependence was obtained for determining the parameter characterizing the initial portion of the curve of the reference line of the initial roughness profile:

$$\nu_{out} = \frac{t_{m\ out} R_{p\ out}}{50 R_{a\ out}} - 1, \text{ then} \qquad \Delta h_{pl} = R_{p\,\text{out}}\left(\frac{\Delta p}{\Delta HB \cdot t_{m\,\text{out}} \Delta A_a}\right)^{\frac{1}{\nu_{out}}}.$$

At the point output contact, which is transformed under the load into an elliptic, the Hertz theory [1, 2] determines the distribution of the contact pressure over the ellipsoid with the maximum pressure in the center $p_{\max} = \frac{3\Delta P_{inv}}{c\pi a' b'}$, where ΔP_{inv} - changes in the hard roller pressure force N.

The coefficient c represents the relation between the average pressure on the contact area $\overline{p}$ causing the plastic flow and the flow stress σ_m, so $c = \frac{\overline{p}}{\sigma_т}$ [1].

According to the hard roller and the workpiece geometry there are three possible cases for which according to the scheme $A_{a\ rol}$ is calculated according to the formulas:

$$A_{a..rol.(\Omega\rangle 0)} = \frac{a' \pi D_p arctg \frac{2b'}{D_{rol}}}{4R_{np} 90^o}; \qquad A_{a.rol.(\Omega\langle 0)} = \frac{b' \pi R_{зв}^{\ 2} \gamma}{2R_{зв} 90^o}; \qquad A_{a.rol.(\Omega=0)} = 2\pi R_{зв}\left(R_{np} - \frac{a'}{2tg\frac{\gamma}{2}}\right),$$

where R_{red} the reduced radius of the hard roller, $R_{red} = \sqrt{\frac{R_{np} D_p}{2}}$ mm; the angle $\gamma = 90^o - \alpha + \xi$ defines the width of the track of the burnishing trench with a longitudinal feed and this is calculated in accordance with the scheme given in Fig. 1; a' the size of the area of the plastic contact between the roller and the workpiece in the direction of the longitudinal feed of the tool in steady state; b' the size of the area of the plastic contact between the hard roller and the workpiece in the lateral direction of the hard roller moving.

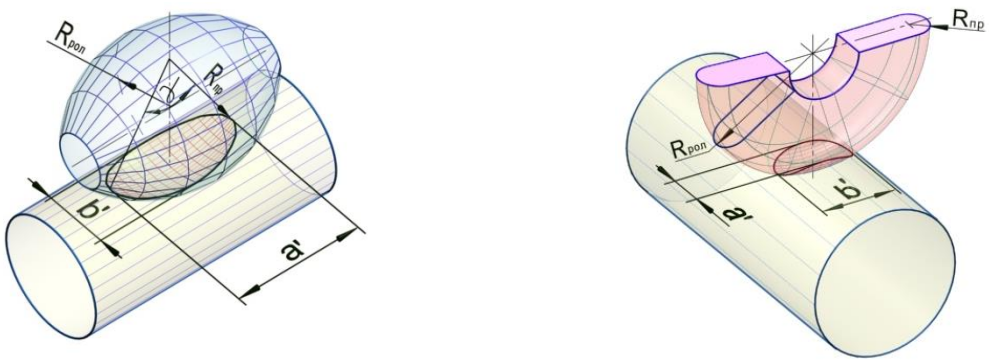

Ω>0 **Ω<0**

Fig. 1. Scheme for calculating the contour area of the plastic contact in the processing zone

According to Ryzhov E.V. the parameter $b^{/}$ is satisfactorily described by the ratio $\frac{a^{/}}{b^{/}} = (1+0{,}3\Omega)\frac{n_b}{n_a}$ where n_a and n_b are the coefficients [4, 9]; **Ω** is an argument characterizing the plastic contact shape.

The coefficients n_a and n_b are determined depending on the argument, $\Omega = \frac{k_o - k_n}{k}$ where k_o the reduced curvature of the hard roller and the workpiece in the rotation plane (roller swinging plate); k_n the reduced curvature of the hard roller and the workpiece in the feed plane; k is the total reduced curvature of the contact bodies at the contact point.

The component of the roughness profile height is conditioned by the oscillatory motion of the tool relative to the processing surface during of finishing-strengthening processing, determined in the paper [9] by the expression:

$$h_{osc} = \frac{h_{pl\,\max} - h_{pl\,\min}}{\sqrt{\left(1 - \frac{\lambda_{rol}^{\;2}}{\omega^2}\right)^2 + T_h^{\,2}\lambda_{rol}^{\;2}}},$$

where $h_{pl\,max}$ and $h_{pl\,min}$ are the maximum and minimum of the hard roller plastic intrusion values; ω - is roller internal oscillation's frequency; T_h is the dumping time coefficient.

The research data and the given regularities are the basic principles of the SPD technological preparation methods. As a machine-tool for processing by SPD methods (in particular, burnishing and flattening) was used either universal or special metal-working equipment, including CNC machines. This work is considering an ability to use many coordinates SPD processing by rod frame mechanisms of the parallel structure (MPS) [3]. This raises the problem of providing the required level of technological system rigidness (compliance) for such equipment and, in addition, the extension of the functionality of an end-effector, the increasing degrees of freedom, working velocity, working space, and flexibility of processing workpiece with complex surfaces by SPD.

Traditional technology finishing processing by plastic deformation SPD of rotation surfaces use an universal machining equipment, for example, most of the rod form work-pieces are process by smoothing or burnishing on lathes with fixing in centers by steady rests [1]. However, the entire processing is accompanied by not specific to these machine-tool conditions, namely, the ratio of loading effort does not correspond to the technical characteristics of the system support-end effector-workpiece (SEW) (Fig.3). The position changing of the pressing load vector along the longitudal direction causes changes in the elastic pressing values.

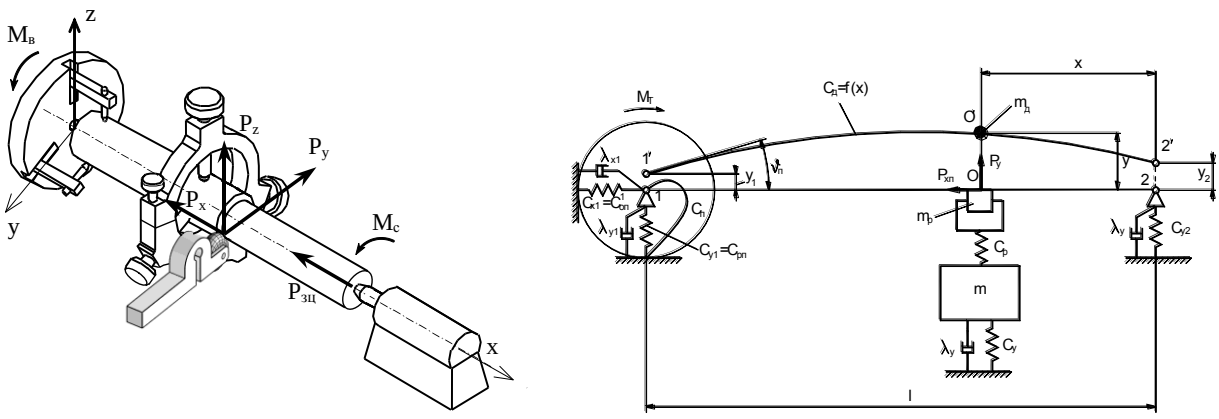

Fig. 2. Running the hard roller on lathes and the calculating scheme

Under such conditions, the technological maintenance of workpiece constant quality parameters, such as the roughness value, the roundness deviation, strengthens degree, etc. cannot be attributed to the volume processing. Therefore this arise the problem of controlled technical performance, in terms of ensuring the SPD dimensional processing parameters. In this paper it is proposed on the basis of previous mathematically-software simulation of the lathe stiffness locations system provide the necessary technological conditions of software-driven processing SPD with using the mechanisms of the parallel structures (MPS) [2].

Presentation of the main research material

In order to clarify the processing force factors, it is necessary to consider the model "workpiece - tool" in general. As the most simple and approximate method for solving this problem, proposed processing by rotation without a longitudinal feed, with measuring the size of the rolled trail profile [4]. Thus, during burnishing the hard roll impresses a pit on surface that transforms into a trail that represents a plastically deformed contact impression. The trail width and the trail curvature in the axial section of the hard roller is practically coincided with the reconstructed trail width and curvature. The start of longitudinal feed the trail of the hard roller on the cylindrical surface takes the screw-thread form. The pit width ***a'*** unfolding on the screw-tread line with a step, that equals to the feed $\boldsymbol{S_{feed}}$. As for the traditionally accepted modes the feeding steps are much less than the hard roller trail width, so during the burnishing the traces are overlapping and the hard roller has a touch with each point of the workpiece surface several times (Fig. 4). This overlay is proposed to evaluate the multiplicity of the application of the load $\boldsymbol{K_{mult.apl}}$. When burnishing:

$$K_{mult.apl.} = \frac{S_{longit}\cos\theta}{n\cdot(a-L)},$$

where $\boldsymbol{\theta}$ is the angle of the screw line $\theta = arctg\dfrac{S_{longit}}{\pi D_{\partial}}$; $\boldsymbol{L}$ interval between traces of formed pits $L = \dfrac{S_{longit}}{n}\cdot\cos\theta$; $\boldsymbol{n}$ is the number of the hard rollers (for many roller tools).

Initial data will be $\boldsymbol{K_{mult.apl}}$, $\boldsymbol{n}$, $\boldsymbol{\theta}$, $\boldsymbol{a}$. At the process designing stage for SPD operations, the normalization parameter should be a longitudinal feed, therefore, so more convenient to get the dependence obtained after these transformations:

$$K_{mult.apl.} = \frac{S_{longit}\cos\theta}{(n\cdot a - S_{loongi}\cos\theta)},\ S_{longit} = \frac{K_{mult.apl.}\cdot n\cdot a}{\cos\theta\cdot(1+K_{mult.apl.})}.$$

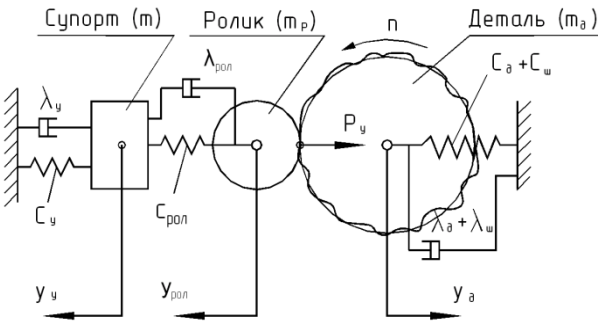

Fig. 3. Simplified dynamic model of the elastic system of the system support-end effector-workpiece at SPD lathe processing

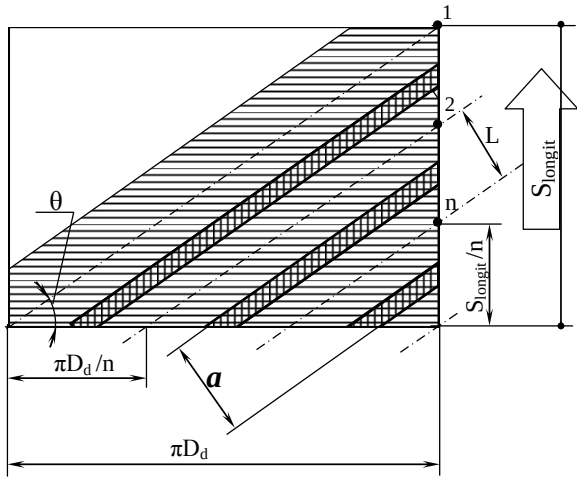

Fig. 4. Overlapping traces of hard rollers on cylindrical sweep elementary area (*a* - trail width, *L* - step between trails)

Further possibility analysis of applying of the MPS machine-tools for SPD needs analyzing the feedback in the system "workpiece – end-effector – MPS machine-tool frame structure", taking into account the constraints that impose the equipment komponetic to the rigidity characteristics and the mobility parameters. Thus the purpose of this research is the formulation of power loads from the end-effector taking into account the processing parameters random fluctuations, the quality assessment of the response of frame parallel structure by the example of the MPS machine-tool SFVPK-4 and quantitative comparative calculations of reaction of different frame structures models by algorithms of the author's software product line namely Tools Glide [6], Tools Response and Tools Apps [7].

A workpiece deviation from the ideal shape gives additional load to the end-effector forming the load vector ***P+ΔP*** (Fig. 2).

A random fluctuation δy leads to increase of the hard roller pressing force with amplitude

$$\Delta P_{y_0} = C_{rol}\delta y(h_{pl\max} - h_{pl\min}),$$

where $\boldsymbol{C_{rol}}$ hard roller frame rigidity; $\boldsymbol{H_{pl\ max}}$, $\boldsymbol{H_{pl\ min}}$ respectively, the maximum and minimum plastic intrusion of the hard roller into the workpiece.

The plastic intrusion value can be calculated as $H_{pl} = R_{pr}\ (1\text{-}\cos\zeta)$, where R_{pr} the profile radius of the hard roller; ζ - the contact angle in plane between the hard roller and the workpiece. $\xi = \arcsin\dfrac{a}{2R_{red}}$

New inequalities are created from the scheme of the kinematic motion of the hard roller,

$$R_{z\ tur} = R_{red}\ (1\text{-}\sin\alpha), \text{ where } \alpha = \arccos\frac{S_{longit}}{2R_{red}}$$

Finally, the value of $\boldsymbol{R_{z\ exp}}$ in steady mode is:

$$R_{z\ exp} = R_{z\ out} - R_{red}\ (\cos\zeta - \sin\alpha),\quad R_{z\ exp} = (R_{z\ out} - h_{pl}) + R_{red}\ (1\text{-}\sin\alpha).$$

In case of $(R_{z\ out} - h_{pl}) \le 0$, first member of this formula loses its value and further calculation has to be done without it.

A reaction analysis of MPS frame system to the load ***P+ΔP*** is necessary to perform by decomposition of the problem into separate stages, with taking into account (or without taking into account, depending on the degree of approximation) the properties of some groups of elements or individual units (Fig. 5).

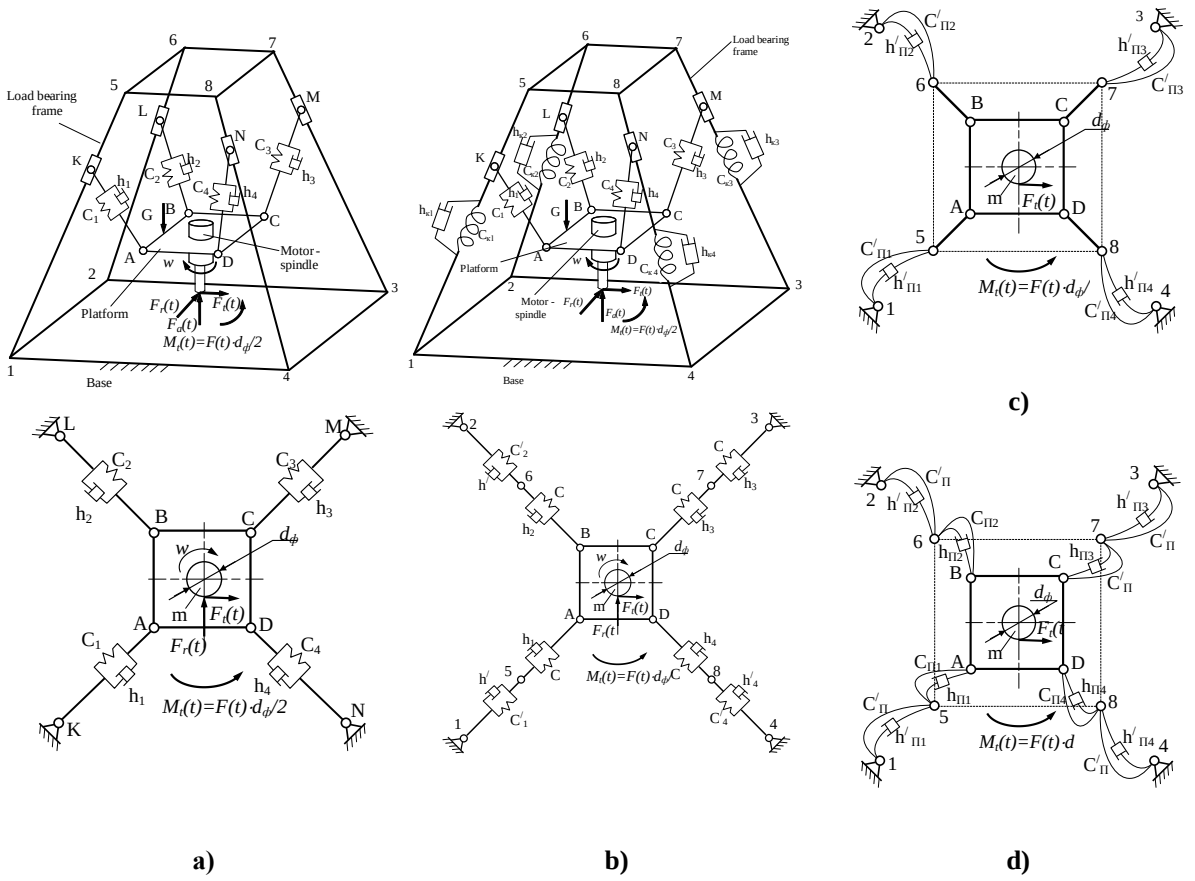

Fig. 5. General dynamic model decomposition examples with separate calculation schemes of the load bearing frame structure of the MPS machine-tool SFVPK-4:
a) taking into account only the linear compliance of the rod system of the moving MPS joints;
b) taking into account linear compliance of the frame system and MPS;
c) taking into account only the turning compliance of the load bearing frame system;
d) taking into account the turning compliance of the MPS and the load bearing frame system

An analysis of such structures is a rather difficult task; on the other hand, the use of general-purpose automated design systems (ANSYS, COMSOL Multiphysics, etc.) also requires significant time-consuming costs for the formation of a geometric model, analysis, connection tasks, etc., especially with necessity to calculate sufficient flexibility, and as a consequence, variability of the layout of the load bearing frame equipment. It is very convenient to model the MPS equipment in various conditions, using specialized software package, such as the toolkit Tools Glide [6], Tools Response and Tools Apps [7], which are being developed at the Department of engineering design (now the Department of transport systems and technical service) Kherson National Technical University.

This software package is made to calculate and analyze the kinematic, static, dynamic reaction of the gliding equipment without limitation on the form of external loads and can be specified as arbitrary time function and internal parameters functions with the system feedback support. In order to analyze the structural response to the working external load within the entire range of technological processing, the system separates static and dynamic loads - passes through the data exchange between the corresponding modules: kinematics (direct or reverse problems) - static response (the formation of tensors of the rigidity coefficients) - dynamic response [10-12]. There is a library of finite elements adapted for tasks of this type, with the ability of connecting components with joints of different types which can be filled with additional objects.

The model of deformation of spatial console elements has the form:

$$\begin{bmatrix} u_x \\ u_y \\ u_z \\ \theta_x \\ \theta_y \\ \theta_z \end{bmatrix}^{\{CONS\}} = \begin{bmatrix} \frac{L^3}{3EI_y} & 0 & 0 & 0 & \frac{L^2}{2EI_y} & 0 \\ 0 & \frac{L^3}{3EI_x} & 0 & -\frac{L^2}{2EI_x} & 0 & 0 \\ 0 & 0 & \frac{L}{EF} & 0 & 0 & 0 \\ 0 & -\frac{L^2}{2EI_x} & 0 & \frac{L}{EI_x} & 0 & 0 \\ \frac{L^2}{2EI_y} & 0 & 0 & 0 & \frac{L}{EI_y} & 0 \\ 0 & 0 & 0 & 0 & 0 & \frac{L}{GI_p} \end{bmatrix} \begin{bmatrix} Q_x \\ Q_y \\ Q_z \\ M_x \\ M_y \\ M_z \end{bmatrix}^{\{CONS\}}.$$

The model of the beam elements deformation:

$$\mathbf{u}^{\{BEAM\}}{}_1 = \hat{\mathbf{C}}_Q^u \mathbf{Q}_1^{\{BEAM\}} + \hat{\mathbf{C}}_M^u \mathbf{M}_1^{\{BEAM\}} + (\mathbf{\Theta}_0 \times \mathbf{L})^{\{BEAM\}} + \mathbf{u}_0^{\{BEAM\}},$$

$$\mathbf{\Theta}^{\{BEAM\}}{}_1 = \hat{\mathbf{C}}_Q^\varphi \mathbf{Q}_1^{\{BEAM\}} + \hat{\mathbf{C}}_M^\varphi \mathbf{M}_1^{\{BEAM\}} + \mathbf{\Theta}_0^{\{BEAM\}}.$$

The model of hard platform:

$$\mathbf{u}_{PLG} = \mathbf{\Theta} \times \mathbf{r}^{\{PLG\}} + \mathbf{u}_C.$$

$$\theta_x^{\{PLG\}} = -\frac{1}{\Delta}\left[(x_{J2} - x_{J3})u_{Jz1} - (x_{J1} - x_{J3})u_{Jz2} + (x_{J1} - x_{J2})u_{Jz3}\right]^{\{PLG\}},$$

$$\theta_y^{\{PLG\}} = -\frac{1}{\Delta}\left[(y_{J2} - y_{J3})u_{Jz1} - (y_{J1} - y_{J3})u_{Jz2} + (y_{J1} - y_{J2})u_{Jz3}\right]^{\{PLG\}},$$

$$\theta_z^{\{PLG\}} = -\frac{u_{Jx2}^{\{PLG\}} - u_{Jx1}^{\{PLG\}}}{y_{J2}^{\{PLG\}} - y_{J1}^{\{PLG\}}},$$

$$u_{cx}^{\{PLG\}} = u_{Jx1}^{\{PLG\}} + \theta_z^{\{PLG\}} y_{J1}^{\{PLG\}},$$

$$u_{cy}^{\{PLG\}} = u_{Jy1}^{\{PLG\}} - \theta_z^{\{PLG\}} x_{J1}^{\{PLG\}},$$

$$u_{cz}^{\{PLG\}} = \frac{1}{\Delta}[(x_{J2}y_{J3} - x_{J3}y_{J2})u_{Jz1} - (x_{J1}y_{J3} - x_{J3}y_{J1})u_{Jz2} +$$

$$+ (x_{J2}y_{J2} - y_{J1}x_{J2})u_{Jz3}]^{\{PLG\}}$$

$$\Delta = \left[x_{J1}y_{J2} - x_{J1}y_{J3} - y_{J1}x_{J2} - x_{J2}y_{J3} + x_{J3}y_{J1} - x_{J3}y_{J3}\right]^{\{PLG\}}.$$

Where $\boldsymbol{u}$ is the joint displacement vector, $\boldsymbol{\varphi}$ the joint relative rotation angle, $\boldsymbol{L}$ the length of the console element and beam element, $\boldsymbol{E}$ the elastic modulus, $\boldsymbol{G}$ the shear modulus, $\boldsymbol{I}$ the static moments of inertia of the element intersection, $\boldsymbol{Q}$, $\boldsymbol{M}$ is the transverse forces and torques in the intersections of console and beam elements, $\hat{\mathbf{C}}_Q^u$, $\hat{\mathbf{C}}_M^u$ rigidity matrix blocks, $\boldsymbol{r_j} = [x_j, y_j, z_j]$ the joint radius-vector in the mobile platform coordinate system.

In order to determine the locations and directions with given rigidity, the Tools Response module allows to automatically receive forms of the tensor ellipsoids and the compliance ellipsoids for the whole processing cycle, while determining the variable dynamic value of the elastic displacement of the frame system end-effector at the load location with the obtaining of the components of the tensor of the reduced rigidity coefficients (linear and torque). The calculation of the tensor ellipsoid is carried out according to the equation $(\hat{\mathbf{T}}\mathbf{r})\mathbf{r} = 1$, where $\boldsymbol{T}$ is the compliance tensor, $\boldsymbol{r}$ the radius-vector.

In order to determine the vibration responses the Tools Apps [7] application imports into the tensor component of the reduced rigidity coefficients also calculates oscillations that forms the size and shape of the workpiece, with taking into account the random factors. For $\boldsymbol{n}$-power mechanism mathematical model is converted to the form:

$$\mathbf{I}(\mathbf{q})\frac{d^2\mathbf{q}}{dt^2}+\mathbf{h}(\mathbf{q},\frac{d\mathbf{q}}{dt})=\mathbf{Q},$$

where $\mathbf{q}$, $\frac{d\mathbf{q}}{dt}$, $\frac{d^2\mathbf{q}}{dt^2}$ are respectively the generalized coordinates vectors, velocities and accelerations; $\mathbf{I}(\mathbf{q})$ – mechanism matrix of inertia; $\mathbf{h}(\mathbf{q},\frac{d\mathbf{q}}{dt})$ centrifugal forces vectors, Coriolis forces vectors and dissipative forces vectors; $\mathbf{Q}$ vector of generalized forces which are attached to the mechanism links and mechanism joints.

Fig. 6a shows the frame system elastic reaction, calculated by software "Tools Response". The program gives animation frames of the processing cycle. It is obviously shows not only significant influence of the frame layout on the structure deformed, but also importance of the mutual orientation of the system "frame end-effector workpiece."

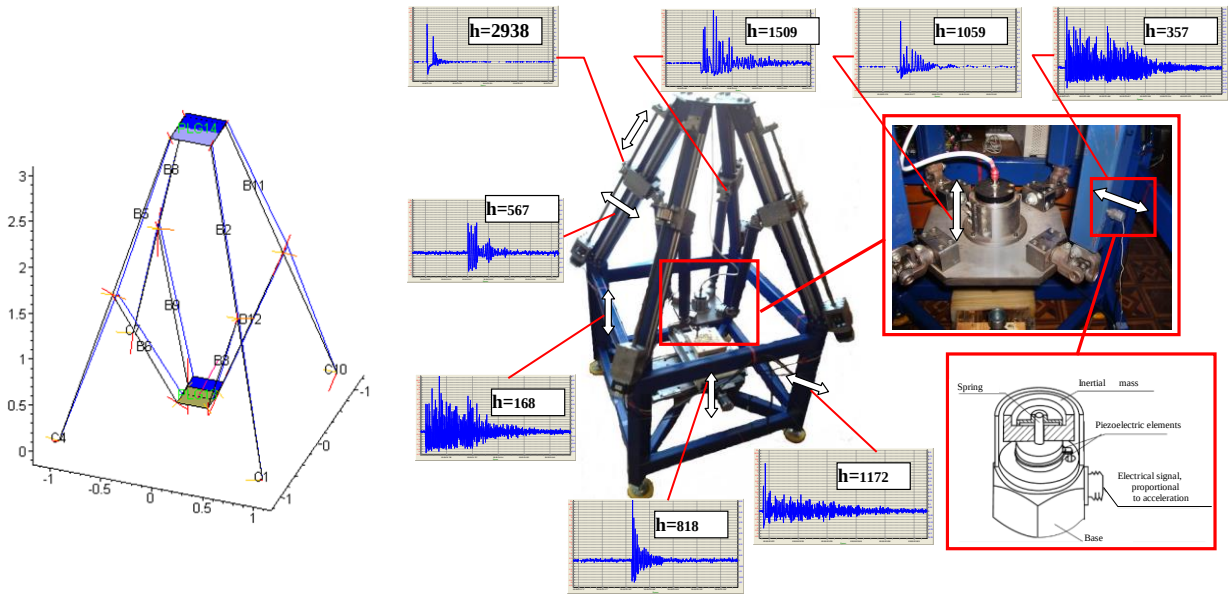

a) **b)**

Fig. 6. An example of the processing animation frame according to models and algorithms by software products "Tools Glide" [6] and "Tools Response" (a), a picture of the links vibrograms of the MPS machine-tool prototype SFVPK-4 (b), (h measured damping coefficients, c^{-1})

Fig. 6b shows a software-controlled sample of a MPC machine-tool, the characteristics of which are currently being studied by the authors in the framework of the state budget scientific theme "Creation of new technology and machinery engineering with the working processes of interaction of solid, fluid and friable bodies and the environment." Using the contact accelerometers experimentally obtained vibrograms of fading oscillations of machine-tool parts and calculated damping coefficients for use in the mathematical models in order to predict dynamic characteristics during of SPD processing [11,12].

It is well known that during of MPS machine-tool processing appears the complex spatial rigidity values, as dependence not only on the radius-vector of the end-effector position, but also as dependence on direction of load reaction, which is equivalent to the formation of the rigidity tensor field in the processing working area. This range of rigidity values, even within a single processing can be quite different from with extremely low values (high elastic state) to values sufficient for SPD processing. So the processing strategies generation relates task of finding optimal trajectories with sufficient bearing capacity and mutual configurations of the system "hard ball - workpiece". At fig. 7 and fig. 8 specified two options of the burnishing implementation process of cylindrical workpiece by hard roller with using MPS. In the first version of the trajectory is implemented a set of guided circles to the workpiece cylindrical surface, in the second version of the trajectory is implemented a set of generating guides.

In order to implement this strategy authors used line of software product, namely Tools Glide [6], Response Tools and Tools Apps [7], developed at the Department of transport systems and technical service of Kherson National Technical University. This software package is made to calculate and analyze the kinematic,

static, dynamic reaction of the gliding equipment without limitation on the form of external loads and can be specified on arbitrary time and on functions of arbitrary internal parameters with the system feedback support.

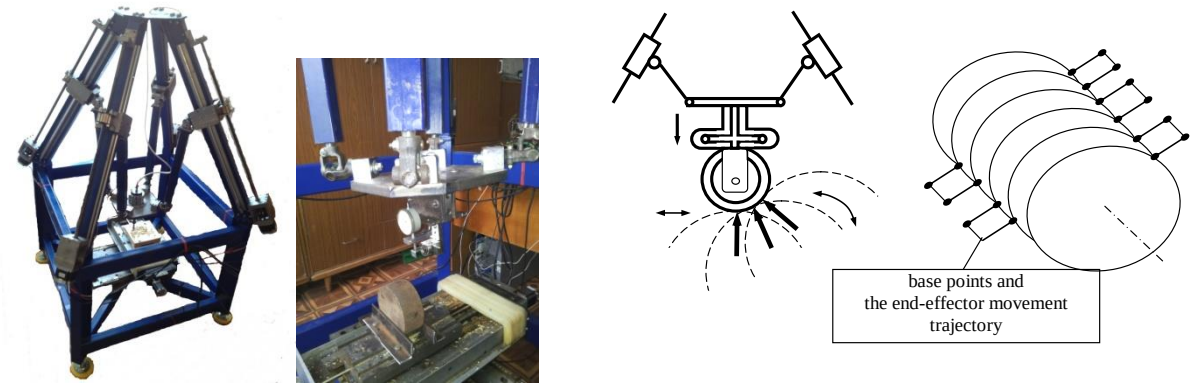

a) b)

Fig. 7. General view of the MPS machine-tool and a rigid fixing of the cylinder work-piece (a) and processing version with trajectories in the form of guided circles set on the cylindrical surface (b)

In order to analyze the structural response to the working external load in the entire range of technological processing, the system separates static and dynamic loads - passes through the data exchange between the corresponding modules: kinematics (direct or reverse problems) - static response (the formation of tensors of the stiffness coefficients) dynamic response [8-11]. There is a library of finite elements adapted for tasks of this type, with the ability of connecting components with joints of different types which can be filled with additional objects.

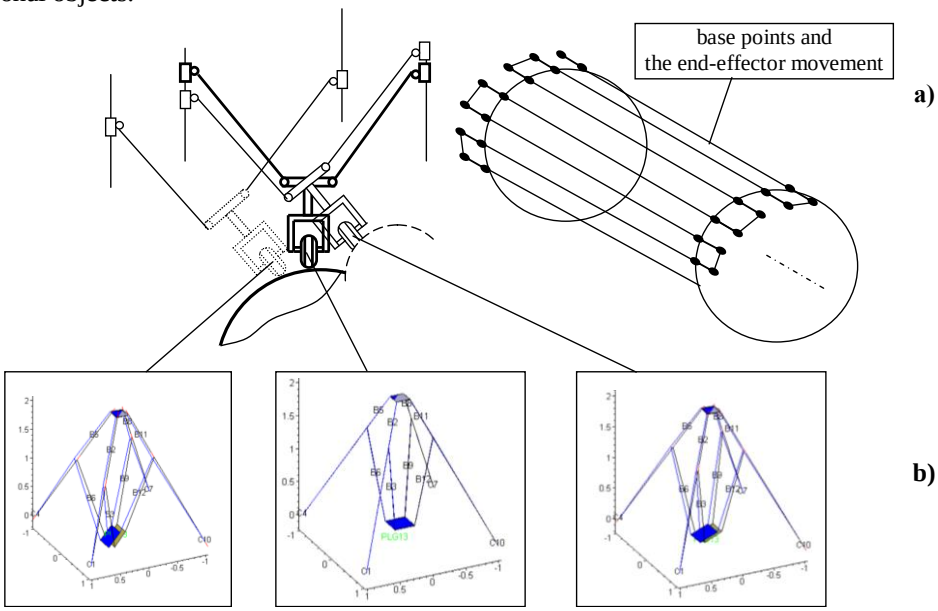

Fig. 8. SPD processing options with trajectories in the form of a set of the lines generating cylindrical surface (a) and the equipment response to this particular strategy (Tools Response, b)

As the input data, apart of the construction geometry, an MPN file is imported to the software Tools Response. This file is a list of the coordinates of the contact points of the end-effector and the workpiece, the end-effector position, the normal vector and the tangent to the workpiece surface, etc. Fig. 8b shows the response of the existing frame machine-tool to the corresponding version of the processing strategy.

Calculation of compliance ellipsoids for each point of the trajectory allows evaluating the capability of this strategy for handling and assembling the frame equipment as a whole before the implementation of the SPD processing. Additional examples of processing strategies (moving cylinder and cone processing) are shown in Fig. 9.

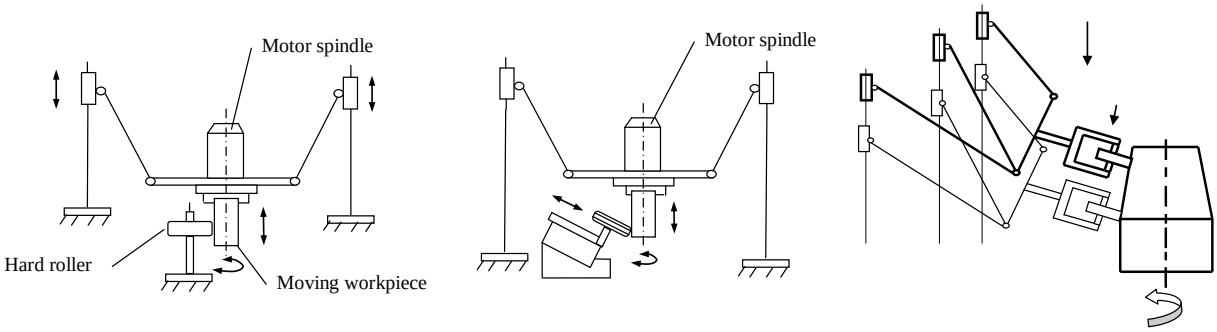

Fig. 9. Examples of processing layout schemes (moving cylinder and cone processing)

Conclusions

The developed mathematical models and interactive software modules for the applied rigidity assessment of the spatial layouts equipment with mechanisms of parallel structure and the end-effector trajectory accuracy under force loading conditions allow estimating the possibility of using such equipment for processing complex-profile work-pieces by surface plastic deformation. This software package (ToolsGlide, ToolsResponse, ToolsApps) is made to calculate and to analyze the kinematic, static, dynamic reaction of the gliding equipment without limitation on the form of external loads and can be specified for any arbitrary time and any internal parameters functions with the system feedback support. To determine the locations and directions with given rigidity, the Tools Response module allows automatically receiving forms of the tensor ellipsoids and the compliance ellipsoids for whole processing cycle. The prototype of the MPS machine-tool is manufactured and the main technical parameters are determined for using to plan the strategies for the SPD processing.

The basis consideration of kinematic schemes of software-controlled SPD processing for rotational bodies and corresponding to them machine-tools frame structure layouts has accomplished. The analysis of the stress-strain state of the system, with analysis of the most suitable technological options and conditions for finishing SPD processing is performed. The comparison of typical processing strategies (machine-tool movements) is carried out. The workpiece basing in the most common frame layouts of the MPS machine-tools is compared. The MPS machine-tools application area for SPD processing is developed. Scientifically proves the ability of MPS machine-tools to perform the SPD processing with the corresponding quality level.

References

1. Евдокимов В.Д., Клименко Л.П., Евдокимова А.Н. Технология упрочнения машиностроительных материалов. Учебное пособие-справочник / Под редакцией д.т.н., проф. В. Д. Евдокимова. – Одесса Николаев: Изд-во НГГУ им. Петра Могилы, 2005. – 352 с.
2. Ткачук А.А. Технологічні основи зміцнювально-вигладжувального оброблення поверхонь обертання. – Луцьк: СПД Гадяк Жанна Володимирівна друкарня «Волиньполіграф», 2014 . – 196 с.
3. Кузнєцов Ю.М. Компоновки верстатів з механізмами паралельної структури: Монографія / Ю.М. Кузнєцов, Д.О. Дмитрієв, Г.Ю. Діневич; під ред. Ю.М. Кузнєцова. – Херсон: ПП Вишемирський В.С., 2009. – 456 с.
4. Забезпечення якості обробки довгомірних деталей поверхневим пластичним деформуванням з використанням полімервмісних МОТЗ: Автореф. дис ... канд. техн. наук: 05.02.08 / Д. О. Дмитрієв; В.о. Нац. техн. ун-т України "Київський політехнічний інститут".– К.: Б.В., 2003. – 22 с.
5. Писаренко Г.С., Яковлєв А.П., Матвеев В.В.: Справочник по сопротивлению материалов. – Киев: Наук. думка, 1988. – 736 с.
6. Комп’ютерна програма “ToolsGlide”. Свідоцтво про реєстрацію авторського права на твір №57913. / С.А. Русанов, Д.О. Дмітрієв, П.В.Кеба, Ю.М. Кузнєцов. – Заявл. 03.11.2016; Опубл. 29.12.2016.
7. Комп’ютерна програма “ToolsApp”. Свідоцтво про реєстрацію авторського права на твір №57913. / С.А. Русанов, Д.О. Дмитрієв, М.І. Подольський, Ю.М. Кузнєцов. – Заявл. 03.11.2014; Опубл. 29.12.2014.

8. Кузнецов Ю.Н. Анализ динамической системы шпиндель-патрон-деталь токарного автомата. – Вестник машиностроения, 1990, №8, с. 42-47.
9. Рыжов Э.И., Суслов А.Г., Федоров В.П. Технологическое обеспечение эксплуатационных свойств деталей машин. – М.: Машиностроение, 1979. – 176 с.
10. Русанов С.А., Дмитрієв Д.О., Комплексний аналіз механізмів паралельної структури засобами цільових систем автоматизованого моделювання // Тези доповідей VII міжнародної науково-технічної конференції «Теоретичні та практичні проблеми в обробці матеріалів тиском і якості фахової освіти», Київ – Херсон, 2016, с. 152-155.
11. Дмитрієв Д.О., Русанов С.А., Кеба П.В., Півень С.М. Зовнішні модулі для прогнозування та управління складними рухами ланок механізмів паралельної структури // Комплексне забезпечення якості технологічних процесів та систем (КЗЯТПС – 2016): матеріали тез доповідей VI міжнародної науково-практичної конференції. – Чернігів: ЧНТУ, 2016.– С. 44-47.
12. Русанов С.А., Рачинський В.В., Дмитрієв Д.О. Просторовий аналіз шарнірно-стрижневих механізмів для механічної обробки поверхневим зміцненням складнопрофільних деталей. // Матеріали II-ї всеукраїнської конференції «Приладобудування і метрологія. Сучасні проблеми, тенденції розвитку». Луцьк: ЛНТУ, 2016, С. 81-83. https://drive.google.com/file/d/0B4l5ExT-ldYda2M4V0QxYzJ2Rk0/view.