УДК 615.47:616.073

N.I. ZABOLOTNA, K.O. RADCHENKO
Vinnitsa National Technical University, Ukraine

DIAGNOSTIC CAPABILITIES OF POLARIZATION REPRODUCTION OF MUELLER-MATRIX IMAGES OF THE CERVIX SUBSURFACE TISSUE LAYER

The Mueller-matrix tomography diagnostic capabilities of a smooth muscle subsurface layer of the cervix shielded by connective tissue are investigated in this paper. Efficiency of the polarization modulation tomography method to restore the structure of Muller-matrix images of "phase" elements is established.

Keywords: polarization, biological tissue, subsurface layer, Mueller-matrix tomography, statistical analysis, correlation analysis, fractal analysis.

Н.І. ЗАБОЛОТНА, К.О. РАДЧЕНКО
Вінницький національний технічний університет

ДІАГНОСТИЧНІ МОЖЛИВОСТІ ПОЛЯРИЗАЦІЙНОГО ВІДТВОРЕННЯ МЮЛЛЕР-МАТРИЧНИХ ЗОБРАЖЕНЬ ПІДПОВЕРХНЕВОГО ШАРУ ТКАНИНИ ШИЙКИ МАТКИ

В роботі досліджено діагностичні можливості Мюллер-матричної томографії підповерхневого шару гладкого м'язу шийки матки, екранованого сполучною тканиною. Встановлена ефективність методу поляризаційно-модуляційної томографії для відновлення структури Мюллер – матричних зображень "фазових" елементів.

Ключові слова: поляризація, біологічна тканина,під поверхневий шар, Мюллер-матрична томографія, статистичний аналіз, кореляційний аналіз, фрактальний аналіз.

Introduction

One of the perspective development directions of diagnostic technology of biological tissue (BT) structure heterogeneity is the development of highly sensitive automated laser polarimetry. Automated control of polarization characteristics of inhomogeneous BT distributions obtained from the multilayer BT Mueller-matrix allows the identification of structural changes in BT [1-4].

Criteria for diagnosis of muscular dystrophy, precancerous conditions of connective tissue,

collagenoses, etc. were formulated as a result of the implementation of amorphous-crystalline biological tissue model to determine the correlation of the element distributions of Mueller-matrix BT images and orientation birefringent BT ability [4-7]. However, real investigated biological objects are more complex multi-layer structures with the need of diagnostic changes in an orientation-phase structure of the biological crystal network of subsurface tissue layers shielded by other biological tissue layers one of human organs.

The method and the system of reproduction polarization distributions of Mueller matrix elements of internal (shielded) layers of double-layer BT networks are proposed in [8]. According to this method one can find such values of the optical axes direction and phase shifts of optically uniaxial biological crystals where the influence of the outer layer of a dual-layer BT is virtually eliminated by polarizating of state variation of the laser radiation that probes two-layer BT and monitoring changes in the values of the corresponding elements of the Mueller-matrix images. On the basis of complex statistical, correlation and fractal approach applied to the analysis of polarizationally reconstructed Mueller matrix images of multilayered biological tissues according this method in [8] the interrelations between the experimentally measured and polarizationally reconstructed distributions of matrix elements were revealed. However, there is a need of further experimental studies of these two-layer BT types for this method using the considered system to establish their diagnostic capabilities.

The task of this research is experimental study of diagnostic possibilities of polarization reproduction of Mueller-matrix images of the subsurface smooth muscle screened by the layer of the cervix connective tissue by changing polarization states of the probe laser radiation in a two-dimensional Mueller-matrix imaging system.

Polarization reproduction of biological layers subsurface structure in a two-dimensional system of Mueller-matrix imaging BT

The main idea of this approach is polarization state $(\alpha_0;\beta_0)$ variation of the laser beam probing the tissue (z_{ik}) and monitoring changes of Stokes vector $S_{i=1;2;3;4}(X,Y)$ parameters in the points (X,Y) of its polarizationally inhomogeneous $(\alpha(X,Y);\beta(X,Y))$ image.

The analysis of analytical expressions of Mueller matrix elements (equation (1), (2)) shows that at certain values of the direction of the optical axis ρ and the phase shift δ of a biological crystal they take "extreme value" that from the physical point of view correspond to the formation of linear or circular polarized wave which irradiates biological crystal network of the outer layer $y_{ik}(\rho,\delta)$ of biological tissue.

$$\{Z\}_j = \begin{Vmatrix} 1 & 0 & 0 & 0 \\ 0 & z_{22} & z_{23} & z_{24} \\ 0 & z_{32} & z_{33} & z_{34} \\ 0 & z_{42} & z_{43} & z_{44} \end{Vmatrix}, \quad (1)$$

where

$$z_{ik}(\rho,\delta) = \begin{cases} z_{22} = \cos^2(2\rho) + \sin^2(2\rho)\cos(\delta); \\ z_{23;32} = \cos(2\rho)\cdot\sin(2\rho)(1-\cos(\delta)); \\ z_{33} = \sin^2(2\rho) + \cos^2(2\rho)\cos(\delta); \\ z_{34;43} = \pm\cos(2\rho)\sin(\delta); \\ z_{24;42} = \pm\sin(2\rho)\sin(\delta); \\ z_{44} = \cos(\delta). \end{cases} \quad (2)$$

Here ρ – is the direction of the optical axis determined by the direction of birefringent fibril packing; $\delta = 2\pi/\lambda\,\Delta nd$ – the phase shift introduced between the orthogonal components of amplitude of the laser wave with wavelength λ that passes through a fibril with the linear size of geometrical section d and birefringence Δn.

As shown in [8], in the case of linearly polarized radiation $\left(x_{ik}(\delta=0), x_{ik}(\delta=\pi)\right)$ Mueller matrix elements z_{ik} of a two-layer biological structure are described by the equations:

$$S_x = \begin{pmatrix} 1 \\ \cos(2\alpha_x) \\ \sin(2\alpha_x) \\ 0 \end{pmatrix} \Leftrightarrow z_{ik}(s_x) = \begin{cases} z_{22} = y_{22}; z_{23} = y_{23}; z_{32} = y_{32}; z_{33} = y_{33}; \\ z_{34} = y_{34}; z_{43} = y_{43}; z_{24} = y_{24}; z_{42} = y_{42}; \\ z_{44} = y_{44}. \end{cases} \quad (3)$$

In the second case $\left(x_{ik}(\delta = \pm 0,5\pi)\right)$, there is the following transformation of matrix elements z_{ik} of a multilayer biological object.

$$S_x^{\otimes} = \begin{pmatrix} 1 \\ 0 \\ 0 \\ 1 \end{pmatrix} \Leftrightarrow z_{ik}\left(S_x^{\otimes}\right) = \begin{cases} z_{22} = y_{23} + y_{24}; z_{23} = y_{23} + y_{24}; \\ z_{32} = y_{33} + y_{34}; z_{33} = y_{32} + y_{34}; \\ z_{34} = y_{32} + y_{33}; z_{43} = y_{42} + y_{44}; \\ z_{24} = y_{22} + y_{23}; z_{42} = y_{43} + y_{44}; \\ z_{44} = y_{42} + y_{43}. \end{cases} \quad (4)$$

In other words, there are certain states of polarization (linear or circular)of laser radiation transformed by the netwok of biological crystals of the subsurface layer where the measuring Mueller matrix elements becomes easier allowing to continue the using them for the orientation-phase structure reproduction of the BT subsurface, as it is shown in [8].

Measurement of aggregate distributions of Mueller matrix elements of histological sections was carried out at the BT system of two-dimensional Mueller-matrix imaging BT architecture that has been considered in detail in [9] and optical circuit is shown in Fig. 1. The principle of the scheme and the operating modes are described in detail in previous works [8,9] and they are not considered in this article.

Optically thin (attenuation coefficient $\tau \le 0,1$) histological sections of cervical (subsurface layer of smooth muscle that screening-nated layer of connective tissue) of healthy and abnormal (precancerous condition - dysplasia) physiological state used as objects of experimental study.

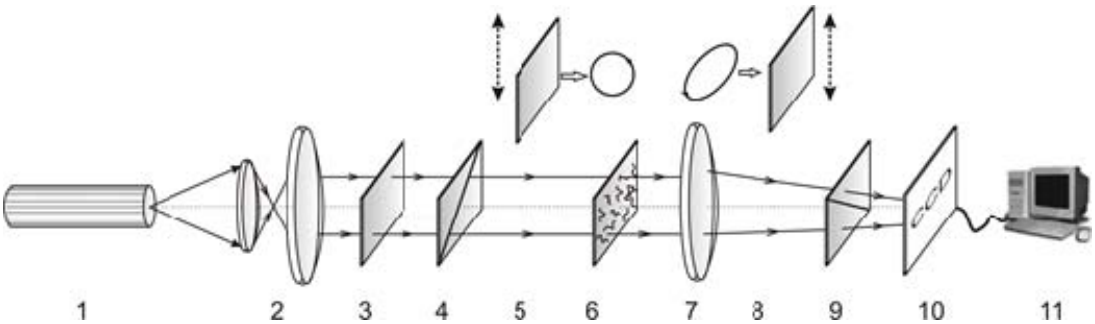

Figure 1. Optical scheme of Mueller-matrix tomography:
1 – He-Ne laser; 2 – collimator; 3 – stationary quarter-wave plate; 5, 8 – mechanically movable quarter-wave plates; 4, 9 – polarizer and analyzer correspondingly; 6 – object of investigation; 7 – microobjective; 10 – CCD-camera; 11 – personal computer

Two groups of Muller - matrix images were measured: diagonal elements that characterize respectively v and "phase" biological crystals network properties of the smooth muscle layer. Measurement in system was carried out in the mode of direct experimental measurements of as described in [8] and in polarization reproduction mode of the subsurface structure of two-layer BT structure.

Muller-matrix image series of polarizationally reconstructed "orientation" element of healthy layer (a,b) and cancer modified (c,d) smooth muscle tissue are shown in Fig. 2. Muller - matrix images of "phase" element of the cervix smooth muscle tissue of various physiological conditions are shown in Fig. 3.

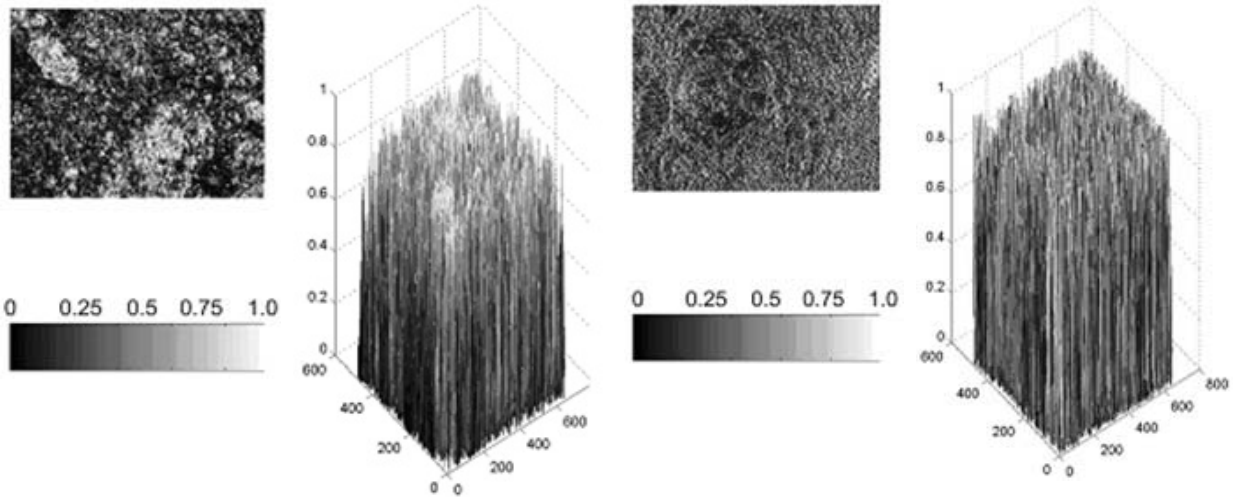

a) b) c) d)

Figure 2. Polarizationally reconstructed Muller-matrix images of "orientation" element $y_{22} = (m \times n)$ of healthy (a,b) and cancer modified (c,d) smooth muscle tissue of cervix

Table 1 contains the values of statistical, correlation and spectral moments characterizing coordinate, autocorrelation and fractal distributions of the directly experimentally measured (optically thin layers of healthy tissue and smooth muscle in a state of dysplasia) and polarizationally reconstructed ("smooth muscle - the connective tissue" layer structure) matrix elements $y_{22}^{*}(m \times n)$ and $y_{44}^{*}(m \times n)$.

From the analysis of the data set forth in Table 1 shows that the method of Muller-matrix polarization properties reproduction of optic-anisotropic multilayer structure of the smooth muscle tissue of the cervix is effective. Although the maximum difference between the experimental parameters and polarization reconstructed is 35% - 45%, however trends are shown in changing the statistics, correlation and spectral moments of measured directly and reconstructed Mueller-matrix images of healthy and cancer altered smooth muscle tissue of the cervix is same.

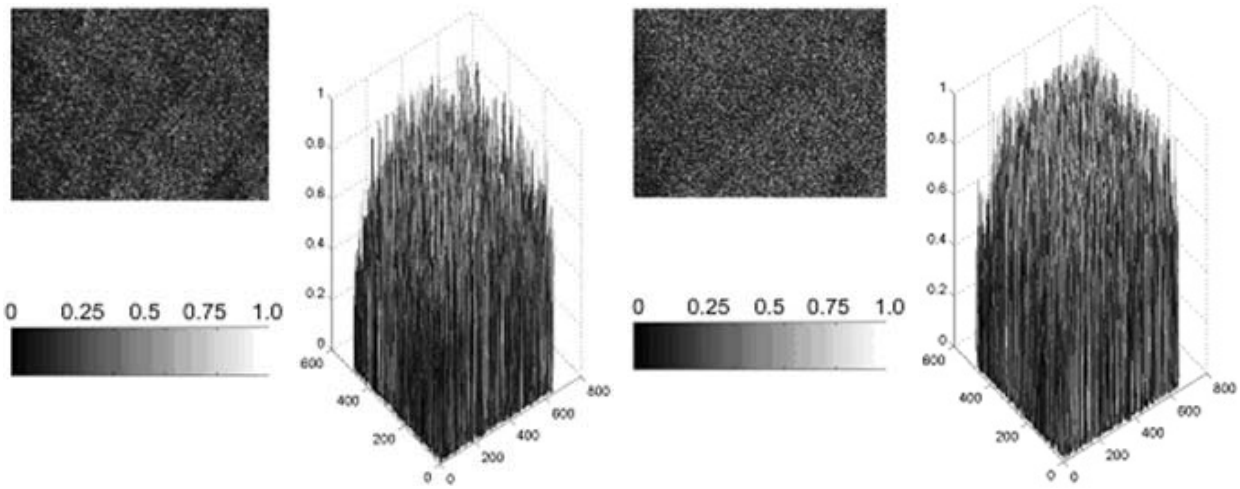

a) b) c) d)

Рис. 3. Polarizationally reconstructed Mueller-matrix images of "phase" element $y_{44}(m \times n)$ healthy (a,b) and cancer modified (c,d) smooth muscle tissue of cervix

Diagnostic performance of all groups of statistics $M_{i=1;2;3;4}$, correlation $Q_{i=2;4}$ and spectral $J_{i=1;2;3;4}$ parameters describing coordinate and the correlation of self-similar structure of Mueller - image matrix "phase"

elements was established. Shown that the most diagnostically effective for optical properties differentiation of healthy and cancer modified layer of smooth muscle tissue of the cervix are:

- 2nd, 3rd i 4th statistical moments of coordinate distributions $y_{22}^{*}(m \times n)$ – the differences between them lie in the range from 1,8 (M_2) to 4 (M_4) times;
- 4th correlation moments - the differences between them reach 2 times;
- 2th, 3rd i 4th spectral moments - the differences between them reach 1,65 – 2 times.

Table 1

Statistics, correlation, spectral distributions of experimentally measured elements and polarizationally reconstructed elements $y_{22}(m \times n)$ and $y_{44}(m \times n)$ smooth muscle tissue of cervix

y_{ik}	y_{22}				y_{44}			
Condition	Norm		Pathology		Norm		Pathology	
$M^{(1)}$	0,31	0,27*	0,38	0,33*	0,25	0,21*	0,19	0,25*
$M^{(2)}$	0,18	0,2*	0,21	0,24*	0,14	0,1*	0,08	0,11*
$M^{(3)}$	0,31	0,36*	0,49	0,57*	0,29	0,19*	0,77	0,56*
$M^{(4)}$	3,35	3,91*	4,19,	4,71*	1,64	1,14*	6,19	4.99*
$Q^{(2)}$	0,22	0,24*	0,18	0,22*	0,18	0,23*	0,14	0,17*
$Q^{(4)}$	1,14	1,42*	1,43	1,59*	0,97	0,74*	1,85	1,11*
$J^{(1)}$	0,62	0,57*	0,55	0,63*	0,59	0,68*	0,66	0,72*
$J^{(2)}$	0,14	0,19*	0,16	0,22*	0,17	0,12*	0,34	0,28*
$J^{(3)}$	0,19	0,21*	0,27	0,24*	0,24	0,15*	0,41	0,29*
$J^{(4)}$	0,42	0,32*	0,48	0,36*	0,32	0,22*	0,57	0,36*

For polarizationally reconstructed Mueller matrix images of "orientation" elements $y_{22}^{*}(m \times n)$ of the layer of smooth muscle tissue of the cervix diagnostic efficiency of the method of polarization-modulation tomography turned insignificant. Differences between statistical $M_{i=1;2;3;4}$, correlation $Q_{i=2;4}$ and spectral $J_{i=1;2;3;4}$ parameters of the two groups of samples does not exceed 15% - 35%.

Conclusions

The experimentally confirmed efficiency of the polarization reproduction method of Mueller-matrix images of subsurface layers of two-layer biological tissues on the base of studying a subsurface smooth muscle screened by the layer of cervix connective tissue.

The relationship between the experimentally measured and reconstructed polarization distributions of matrix elements of birefringent networks of a smooth muscle screened by the layer of connective tissue was first discovered on the base of a complex statistical, correlation and fractal approach to analyze polarization reconstructed by Muller-matrix images of multilayer biological tissues of the cervix.

The average statistical values and the range of variation of objective parameters (statistical moments of the 1st-4th order, correlation and spectral moments) of the coordinate distributions of polarizationally reconstructed phase of Mueller matrix elements that can realize diagnose of precancerous condition (dysplasia) of the cervix are determined.

References

1. Shuliang Jiao, Lihong V. Wang. Two-dimensional depth-resolved Mueller matrix of biological tissue measured with double-beam polarization-sensitive optical coherence tomography. Opt. Lett. – 2002. – Vol. 27. – P. 101-103.

2. J.F. de Boer and T.E. Milner. . Review of polarization sensitive optical coherence tomography and Stokes vector determination. J. Biomed. Opt. – 2002. – V.7. – P.359-371.

3. M. C. Pierce, J. Strasswimmer, B. H.Park [et.al.]. Birefringence measurements in human skin using polarization-sensitive optical coherence tomography. J. Biomed. Opt.– 2004. - Vol. 9. - R. 287-291.

4. Alexander G. Ushenko and Vasilii P. Pishak Laser Polarimetry of Biological Tissue: Principles and Applications. Handbook of Coherent-Domain Optical Methods: Biomedical Diagnostics, Environmental and Material Science [ed. Valery V. Tuchin]. - Kluwer Academic Publishers, 2004. - Vol. 1. –P. 93-138.

5. Ushenko Yu.A., Dubolazov O.V.,Karachevtcev A.O., Zabolotna N.I. The Mueller-matrix elements characteristic values of biological tissues. Applications of Optics and Photonics; Braga; Portugal, 3 - 7 May, 2011: Proceeding SPIE.- – Vol. 8001. -80010J.

6. Zabolotna N.I., Musiichuk, I.V. Principles and methods of Mueller-matrix tomography of multilayer biological tissues. 10th International Conference on Correlation Optics; Chernivtsi; Ukraine; 12-16 September, 2011: Proceeding SPIE.- – Vol. 8338. –833810

7. O. V. Angelsky, A. G. Ushenko, Yu. A. Ushenko [et. al.] Statistical and Fractal Structure of Biological Tissue Mueller Matrix Images. Optical Correlation Techniques and Applications, Oleg V. Angelsky, Ed. Washington: Society of Photo-Optical Instrumentation Engineers , 2007. - P. 213-266.

8. Zabolotna N.I. Metod ta sistema poljarizacijnogo vidtvorennja koordinatnih rozpodiliv elementiv matrici Mjullera dvosharovih sitok biologichnih kristaliv. Optiko-elektronni informacijno-energetichni tehnologiї. 2012. - № 1(23). – S. 99 – 109.

9. Zabolotna N.I. Arhitektura i algoritmi funkcionuvannja ta analizu danih dvovimirnih sistem lazernoї poljarimetriї biologichnih tkanin. Optiko-elektronni informacijno-energetichni tehnologiї. – 2013. - №1(25). – S.54-65.

Література

1. Shuliang Jiao. Two-dimensional depth-resolved Mueller matrix of biological tissue measured with double-beam polarization-sensitive optical coherence tomography / Shuliang Jiao, Lihong V. Wang // Opt. Lett. – 2002. – Vol. 27. – P. 101-103.

2. Boer J.F. Review of polarization sensitive optical coherence tomography and Stokes vector determination / J.F. de Boer and T.E. Milner. // J. Biomed. Opt. – 2002. – V.7. – P.359-371.

3. Pierce M.C. Birefringence measurements in human skin using polarization-sensitive optical coherence tomography / M. C. Pierce, J. Strasswimmer, B. H.Park [et.al.]// J. Biomed. Opt.– 2004. - Vol. 9. - P. 287-291.

4. Ushenko A.G. Laser Polarimetry of Biological Tissue: Principles and Applications / Alexander G. Ushenko and Vasilii P. Pishak// Handbook of Coherent-Domain Optical Methods: Biomedical Diagnostics, Environmental and Material Science [ed. Valery V. Tuchin]. - Kluwer Academic Publishers, 2004. - Vol. 1. –P. 93-138.

5. Ushenko Yu.A., Dubolazov O.V.,Karachevtcev A.O., Zabolotna N.I. The Mueller-matrix elements characteristic values of biological tissues // Applications of Optics and Photonics; Braga; Portugal, 3 - 7 May, 2011: Proceeding SPIE.- – Vol. 8001. -80010J.

6. Zabolotna N.I., Musiichuk, I.V. Principles and methods of Mueller-matrix tomography of multilayer biological tissues // 10th International Conference on Correlation Optics; Chernivtsi; Ukraine; 12-16 September, 2011: Proceeding SPIE.- – Vol. 8338. –833810

7. Angelsky O.V. Statistical and Fractal Structure of Biological Tissue Mueller Matrix Images / O. V. Angelsky, A. G. Ushenko, Yu. A. Ushenko [et. al.] // Optical Correlation Techniques and Applications, Oleg V. Angelsky, Ed. Washington: Society of Photo-Optical Instrumentation Engineers , 2007. - P. 213-266.

8. Заболотна Н.І. Метод та система поляризаційного відтворення координатних розподілів елементів матриці Мюллера двошарових сіток біологічних кристалів / Н.І. Заболотна // Оптико-електронні інформаційно-енергетичні технології. – 2012. - № 1(23). – С. 99 – 109.

9. Заболотна Н.І. Архітектура і алгоритми функціонування та аналізу даних двовимірних систем лазерної поляриметрії біологічних тканин / Н.І. Заболотна // Оптико-електронні інформаційно-енергетичні технології. – 2013. - №1(25). – С.54-65.

Рецензія/Peer review : 27.2.2014 р. Надрукована/Printed : 26.3.2014 р.